SCHEMATIC DIAGRAM -1

A CD SERVO CIRCUIT

—— : +B SIGNAL LINE : CD SIGNAL LINE

OPTICAL PICKUP CIRCUIT

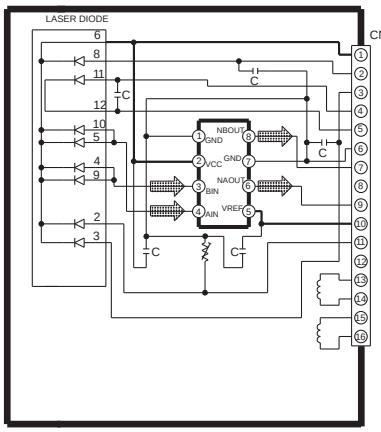

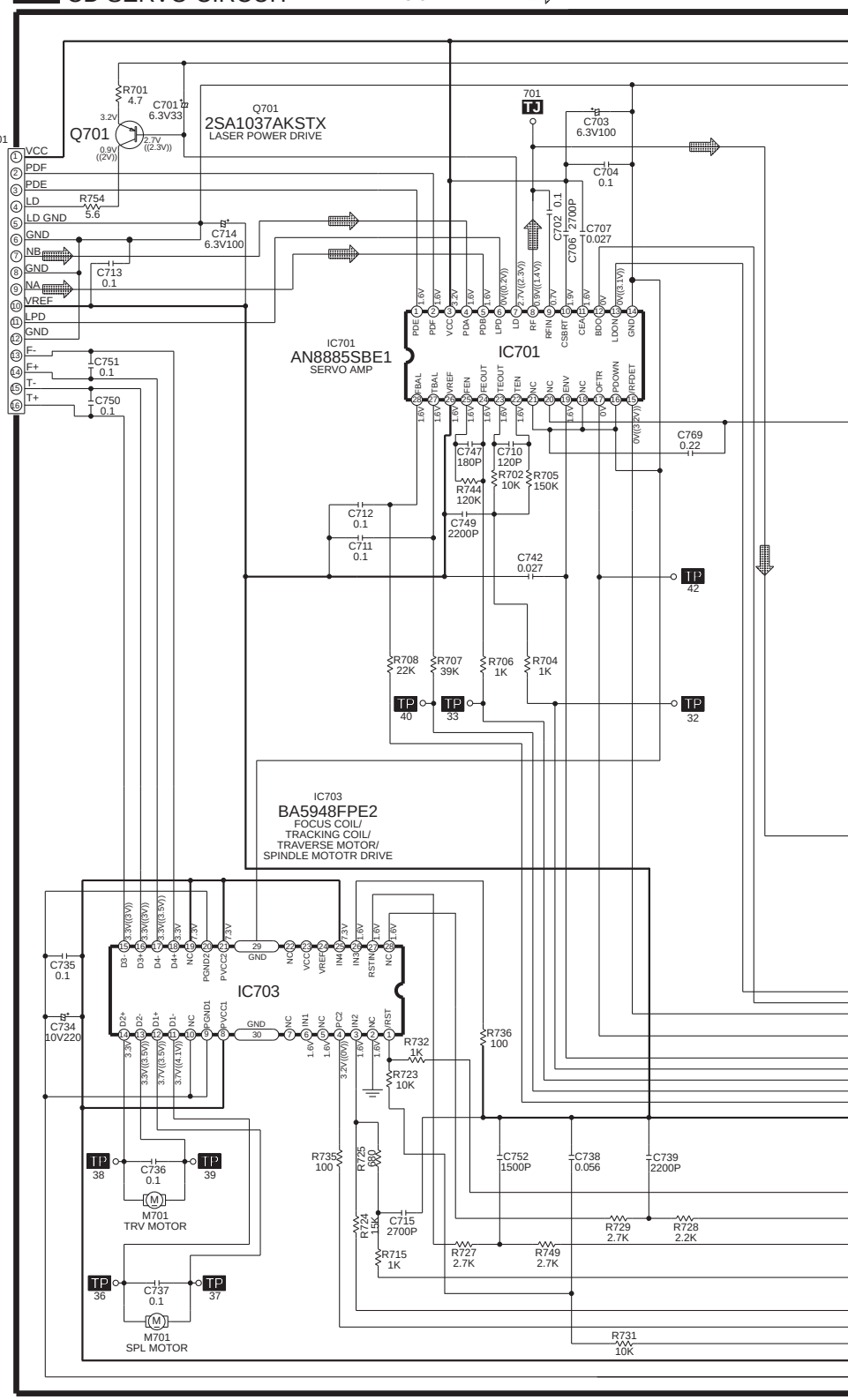

SCHEMATIC DIAGRAM-13

K AC TRANSFORMER CIRCUIT

ac transformer pcb (E/EG) | ac transformer pcb (EB)

—— : +B SIGNAL LINE

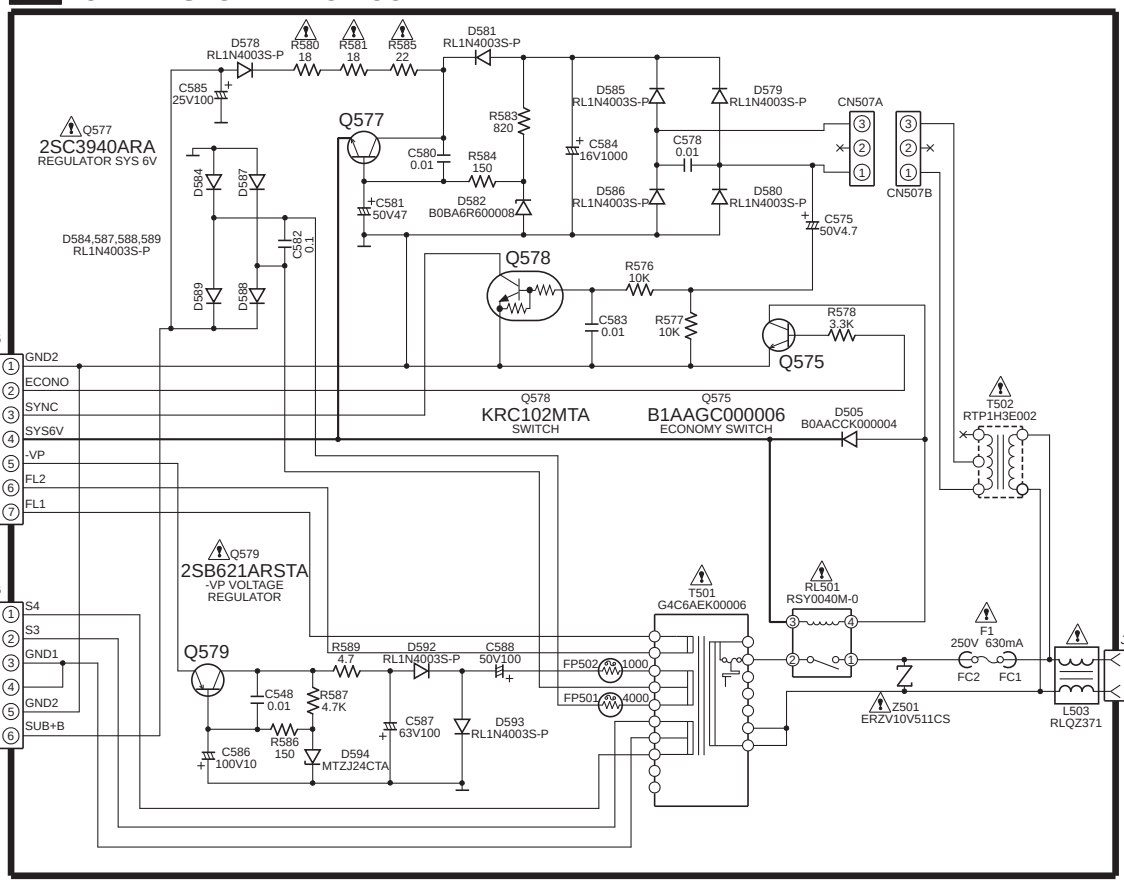

L TACT SWITCH CIRCUIT

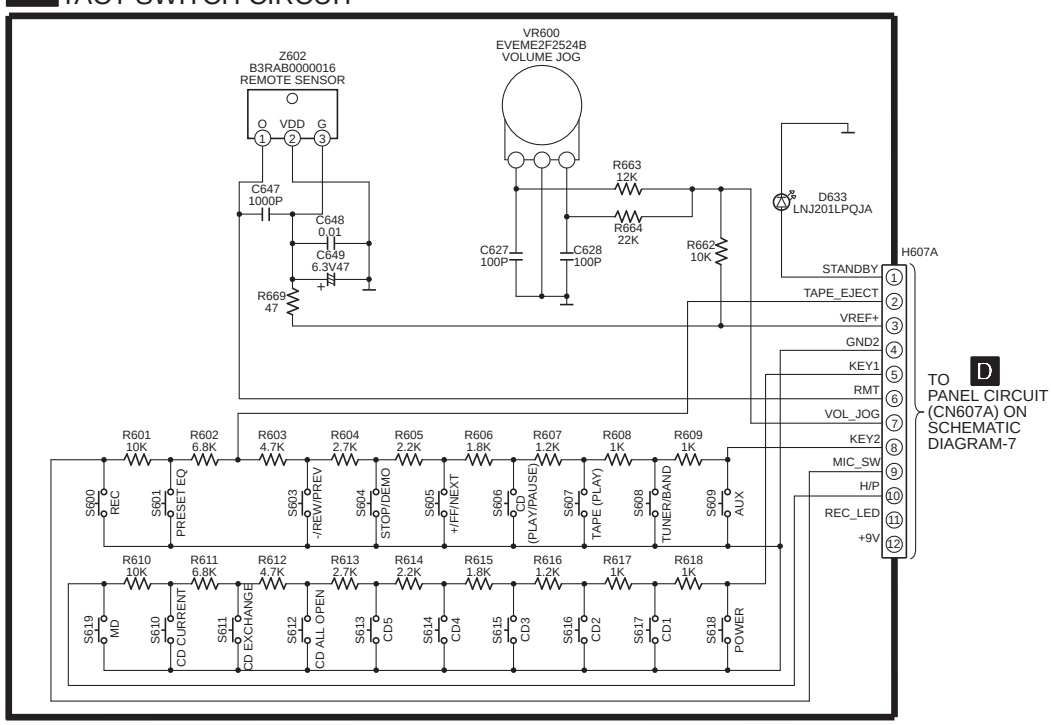

SCHEMATIC DIAGRAM-11

J POWER CIRCUIT

power pcb (E/EG)

power pcb (EB)

——— : +B SIGNAL LINE ⇨ : MAIN SIGNAL LINE

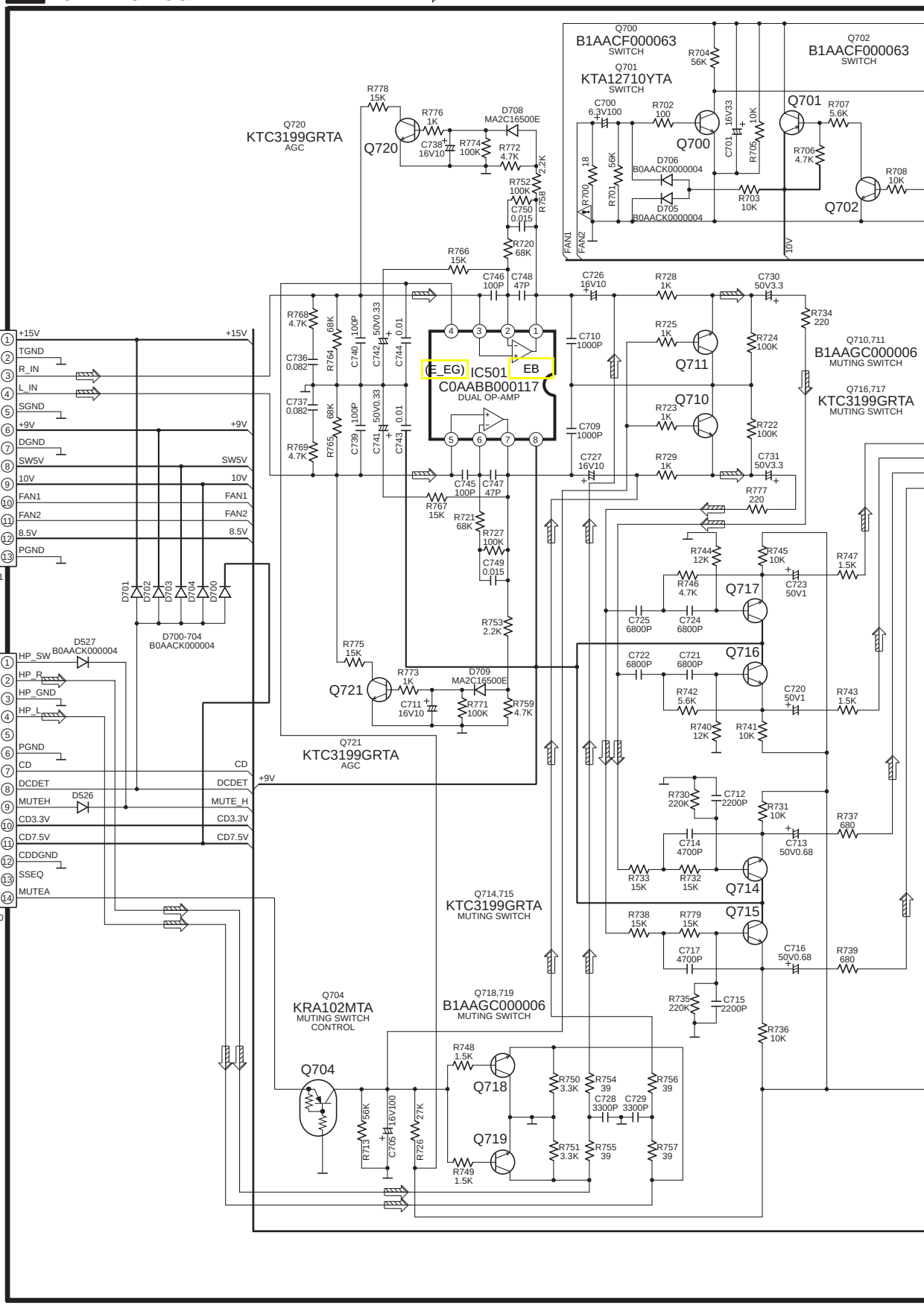

SCHEMATIC DIAGRAM-12

J POWER CIRCUIT

- - - : -B SIGNAL LINE
——— : +B SIGNAL LINE
⇨ : MAIN SIGNAL LINE

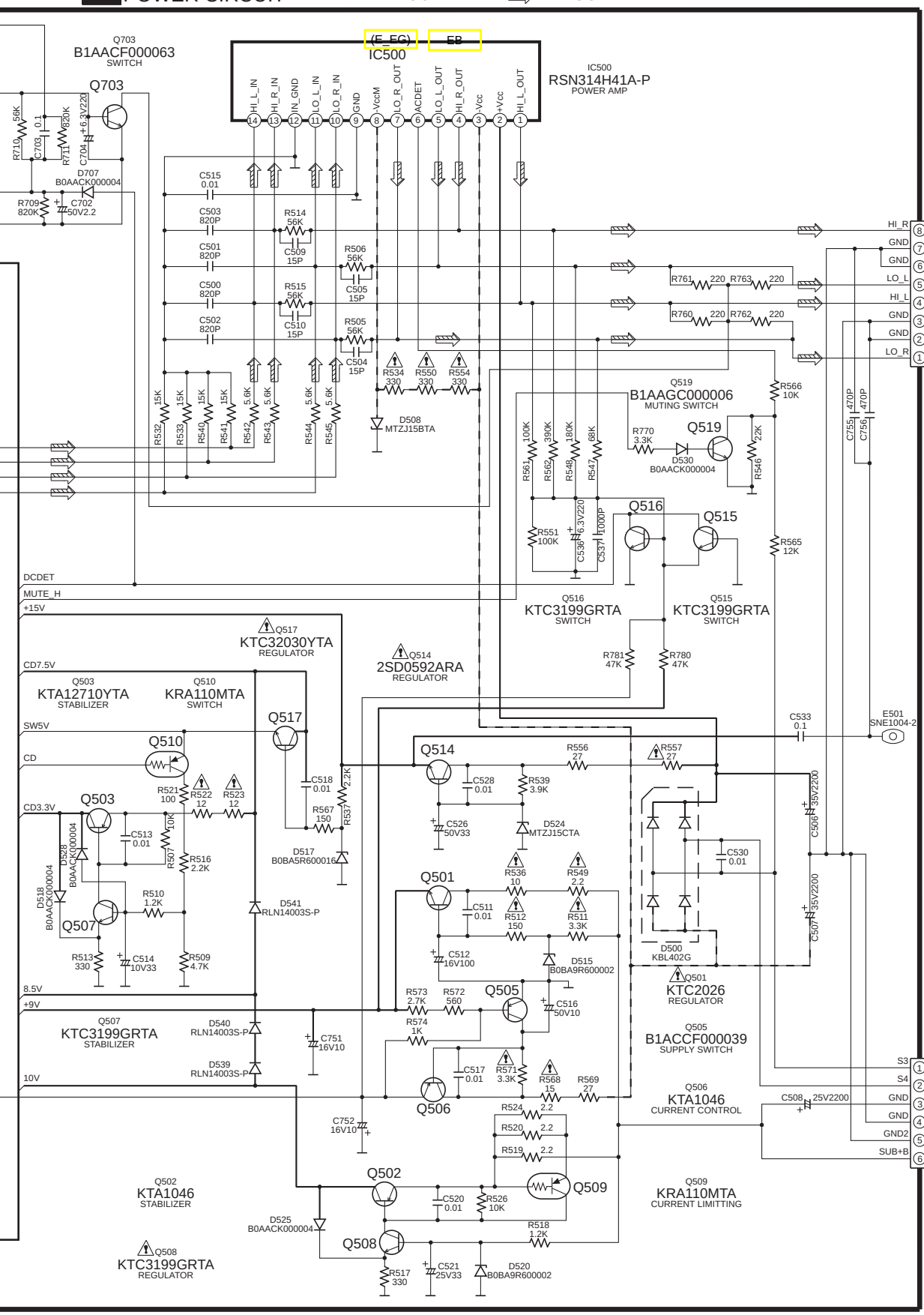

SCHEMATIC DIAGRAM-7

D PANEL CIRCUIT

: +B SIGNAL LINE : MAIN SIGNAL LINE

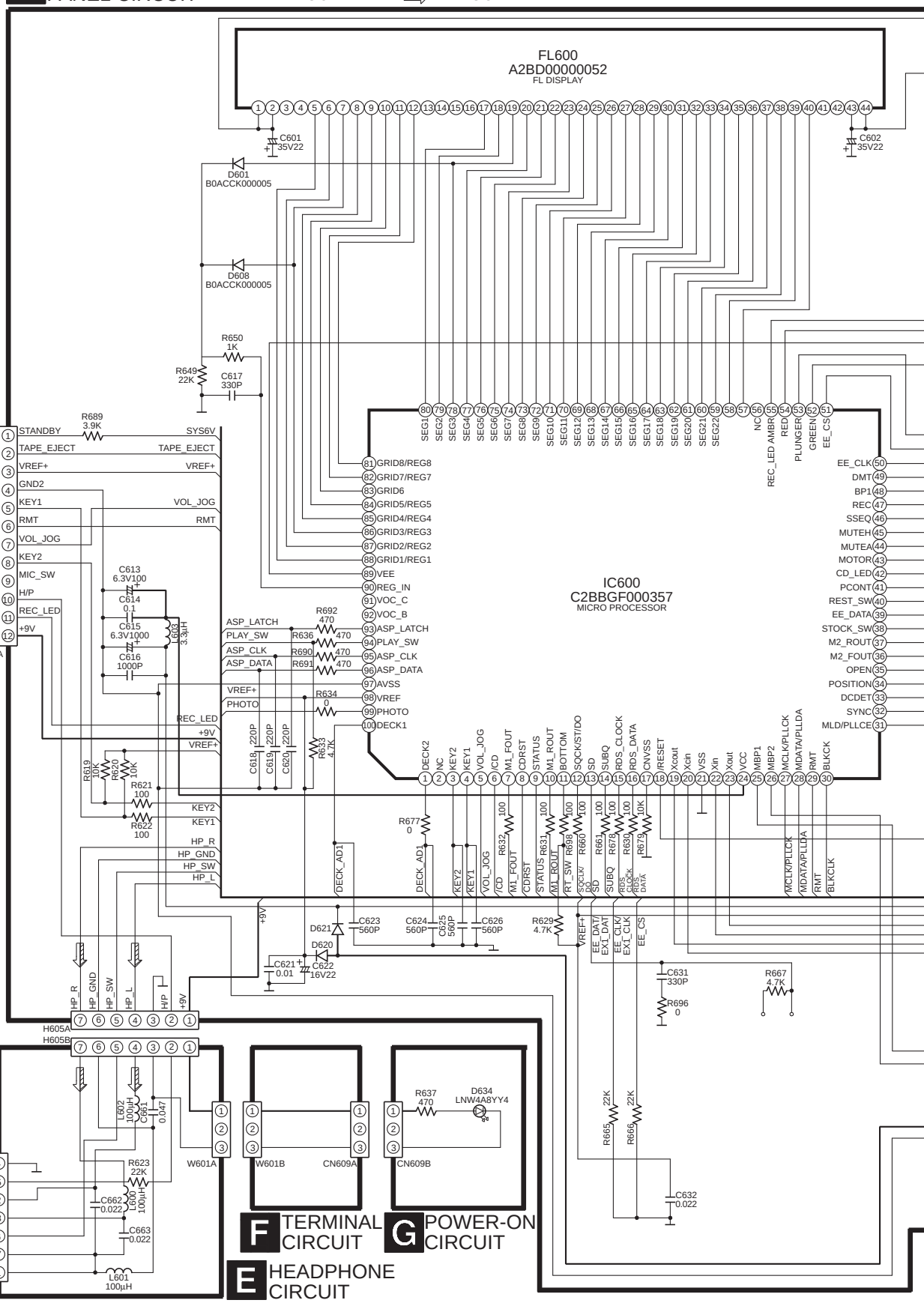

F TERMINAL CIRCUIT

G POWER-ON CIRCUIT

E HEADPHONE CIRCUIT

SCHEMATIC DIAGRAM-8

D PANEL CIRCUIT

: +B SIGNAL LINE
: MAIN SIGNAL LINE
: CD SIGNAL LINE

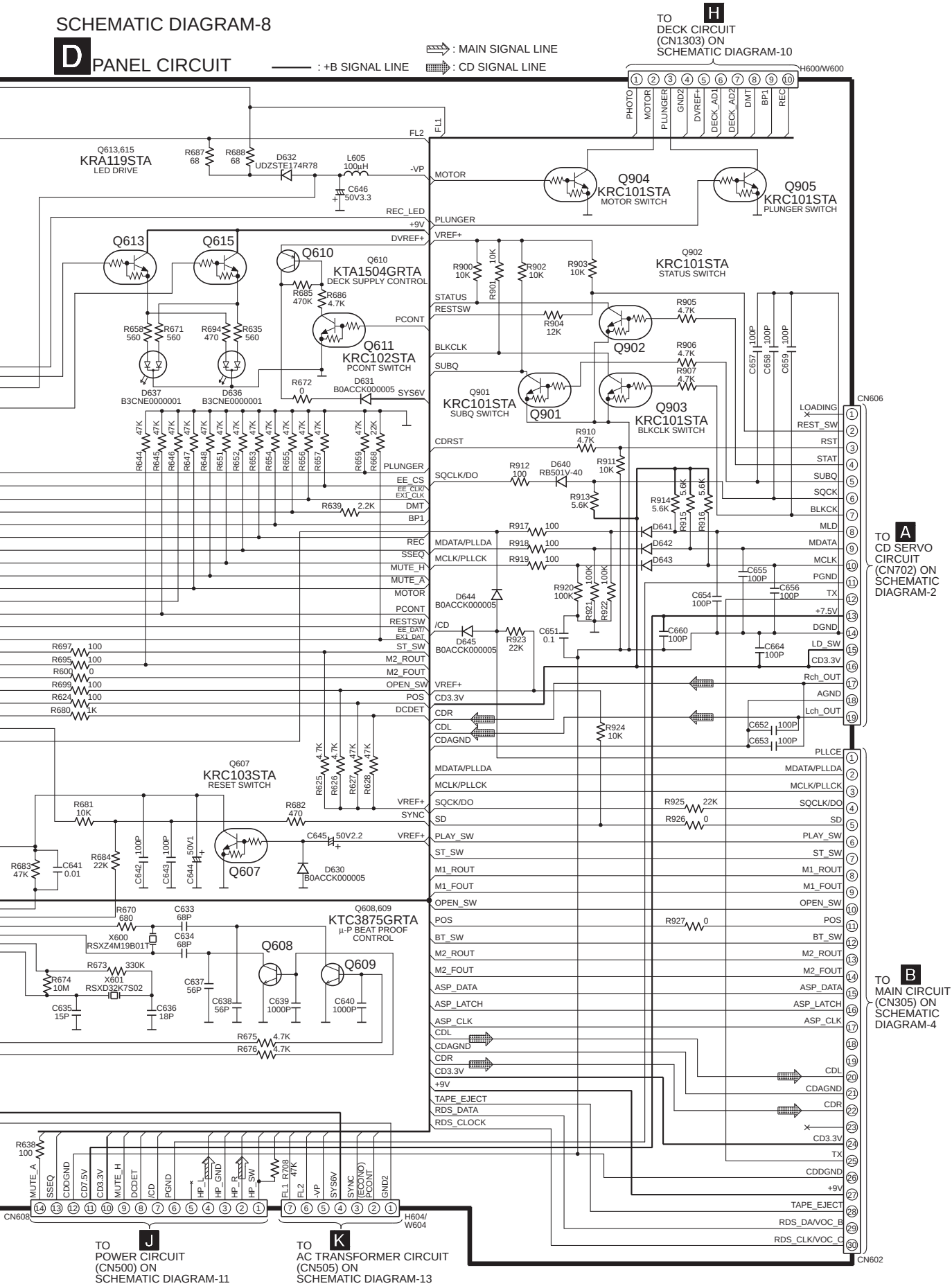

SCHEMATIC DIAGRAM-3

B MAIN CIRCUIT

: +B SIGNAL LINE
: AUX SIGNAL LINE
: AM/FM SIGNAL LINE
: PLAYBACK SIGNAL LINE
: RECORD SIGNAL LINE

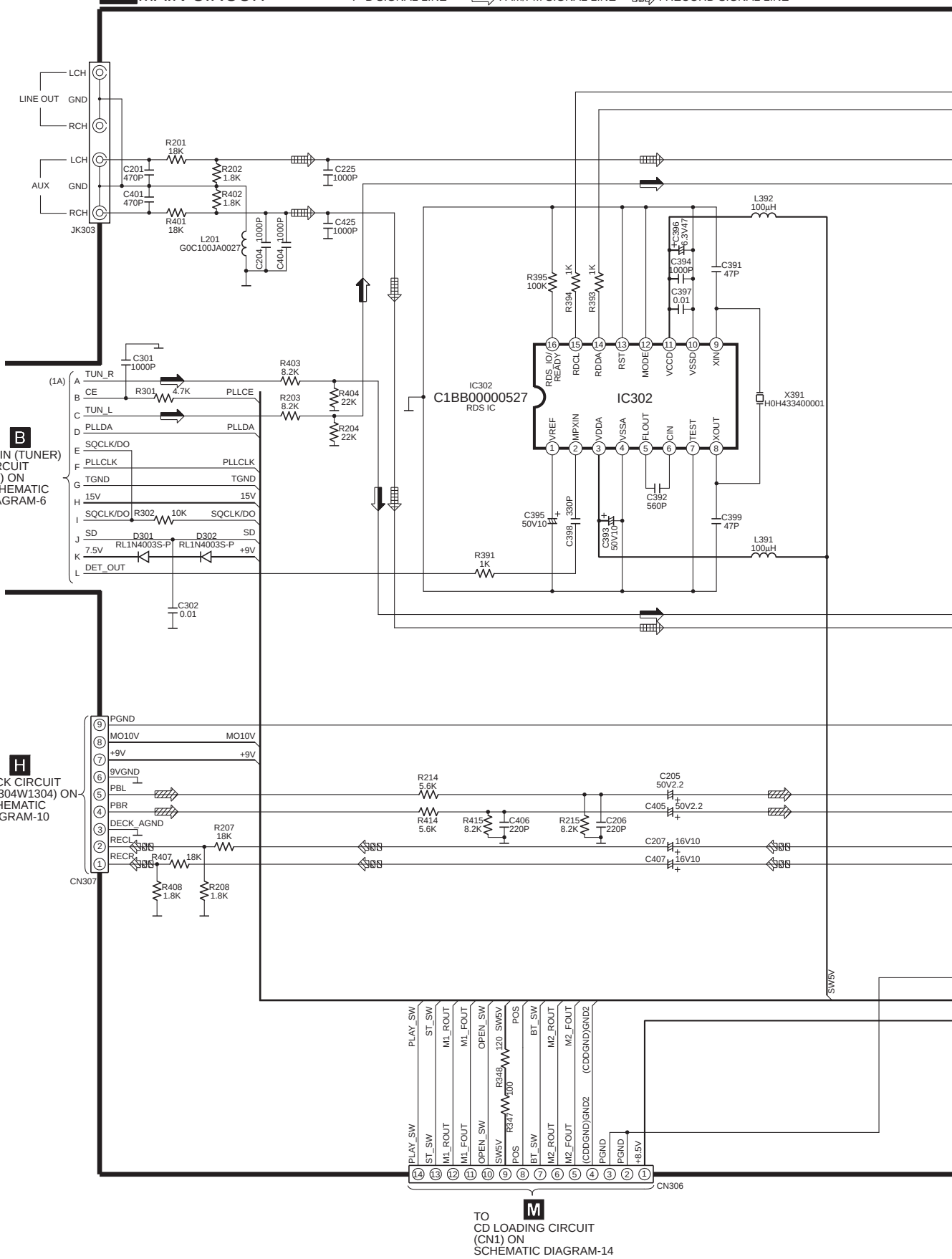

SCHEMATIC DIAGRAM-4

B MAIN CIRCUIT

: +B SIGNAL LINE
: AUX SIGNAL LINE
: AM/FM SIGNAL LINE
: PLAYBACK SIGNAL LINE
: RECORD SIGNAL LINE
: MAIN SIGNAL LINE
: CD SIGNAL LINE

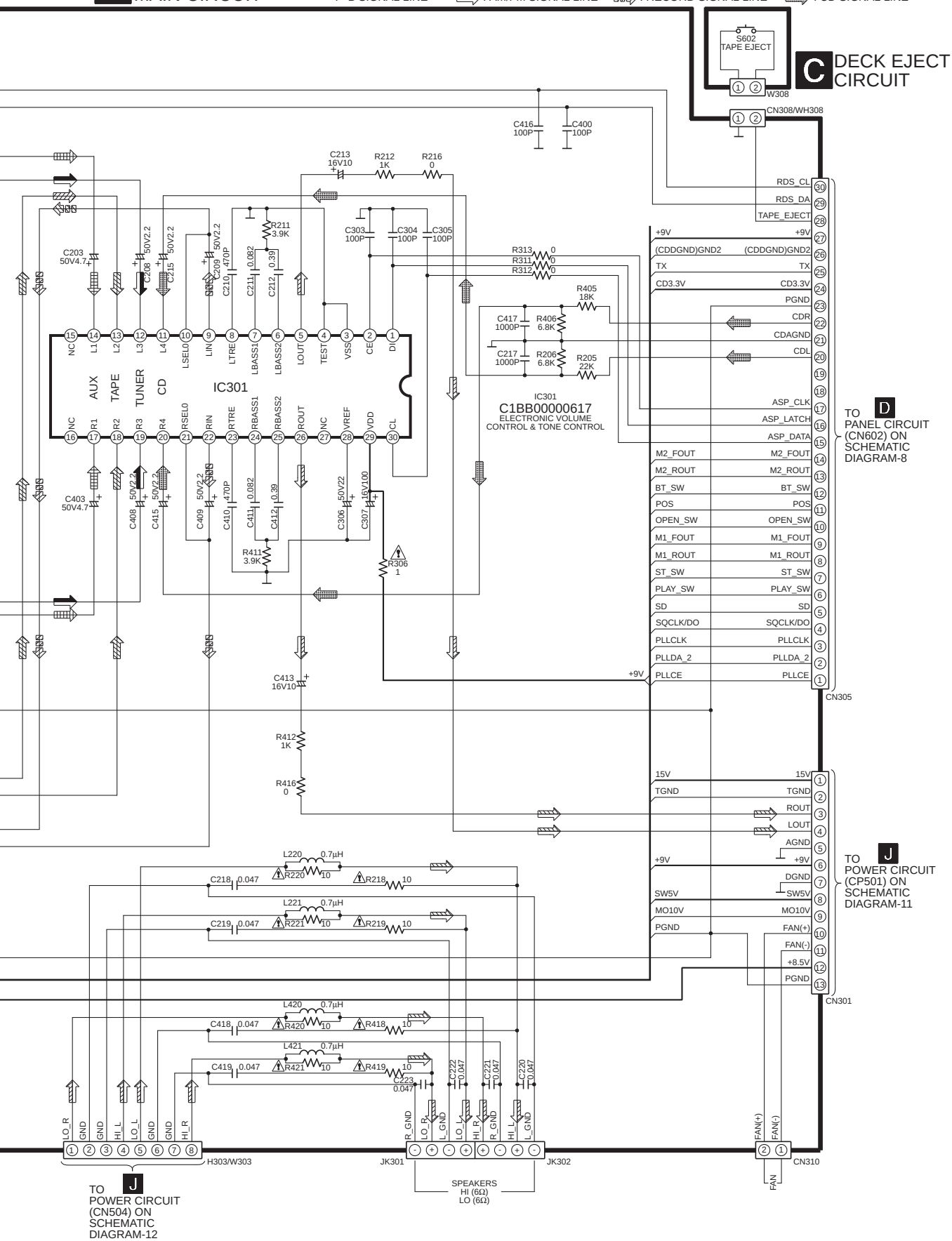

SCHEMATIC DIAGRAM-14

M CD LOADING CIRCUIT

——— : +B SIGNAL LINE

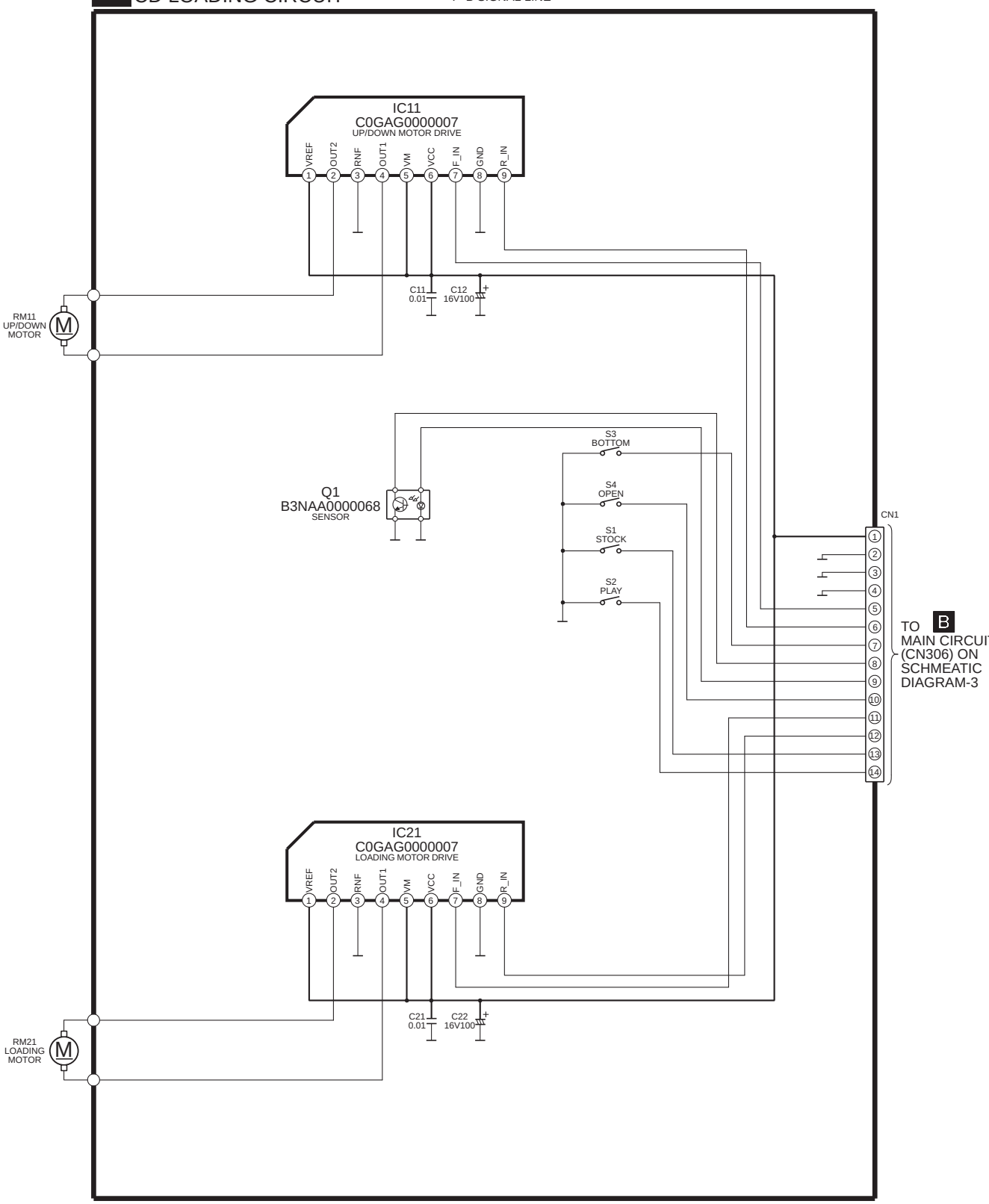

SCHEMATIC DIAGRAM-9

H DECK CIRCUIT

: +B SIGNAL LINE

: PLAYBACK SIGNAL LINE

: REC SIGNAL LINE

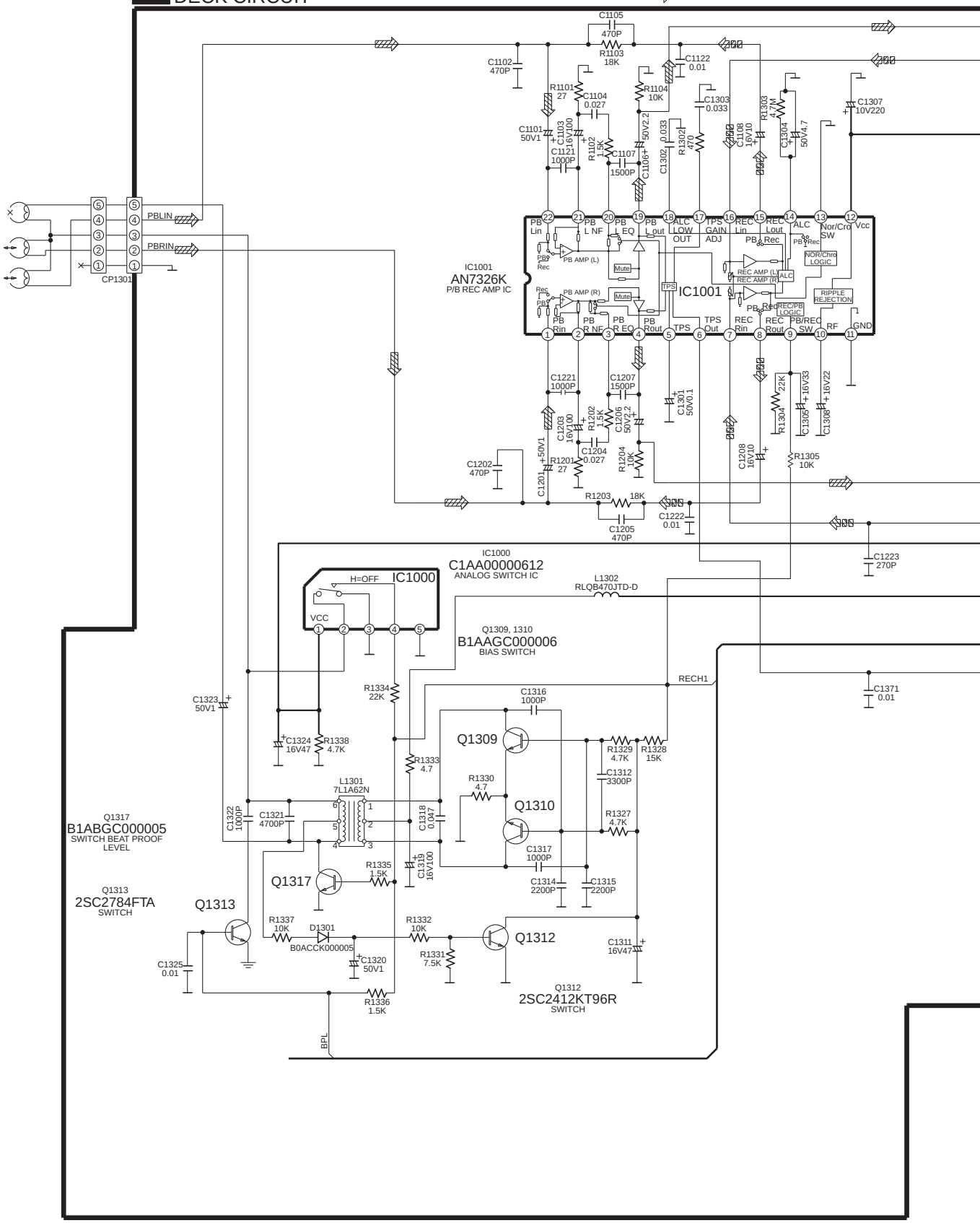

SCHEMATIC DIAGRAM-10

H DECK CIRCUIT

: PLAYBACK SIGNAL LINE
: +B SIGNAL LINE
: REC SIGNAL LINE

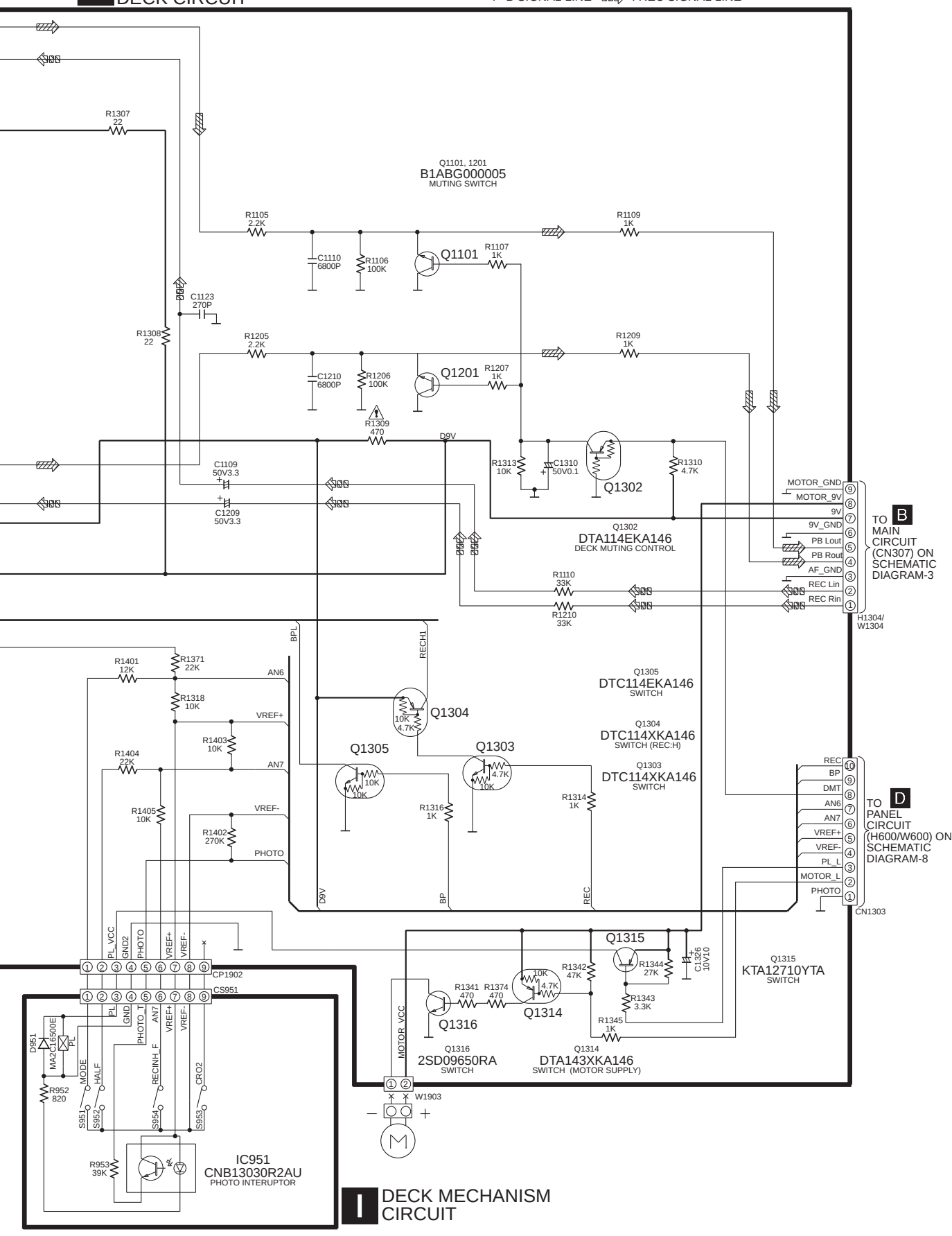

I DECK MECHANISM CIRCUIT

SCHEMATIC DIAGRAM-5

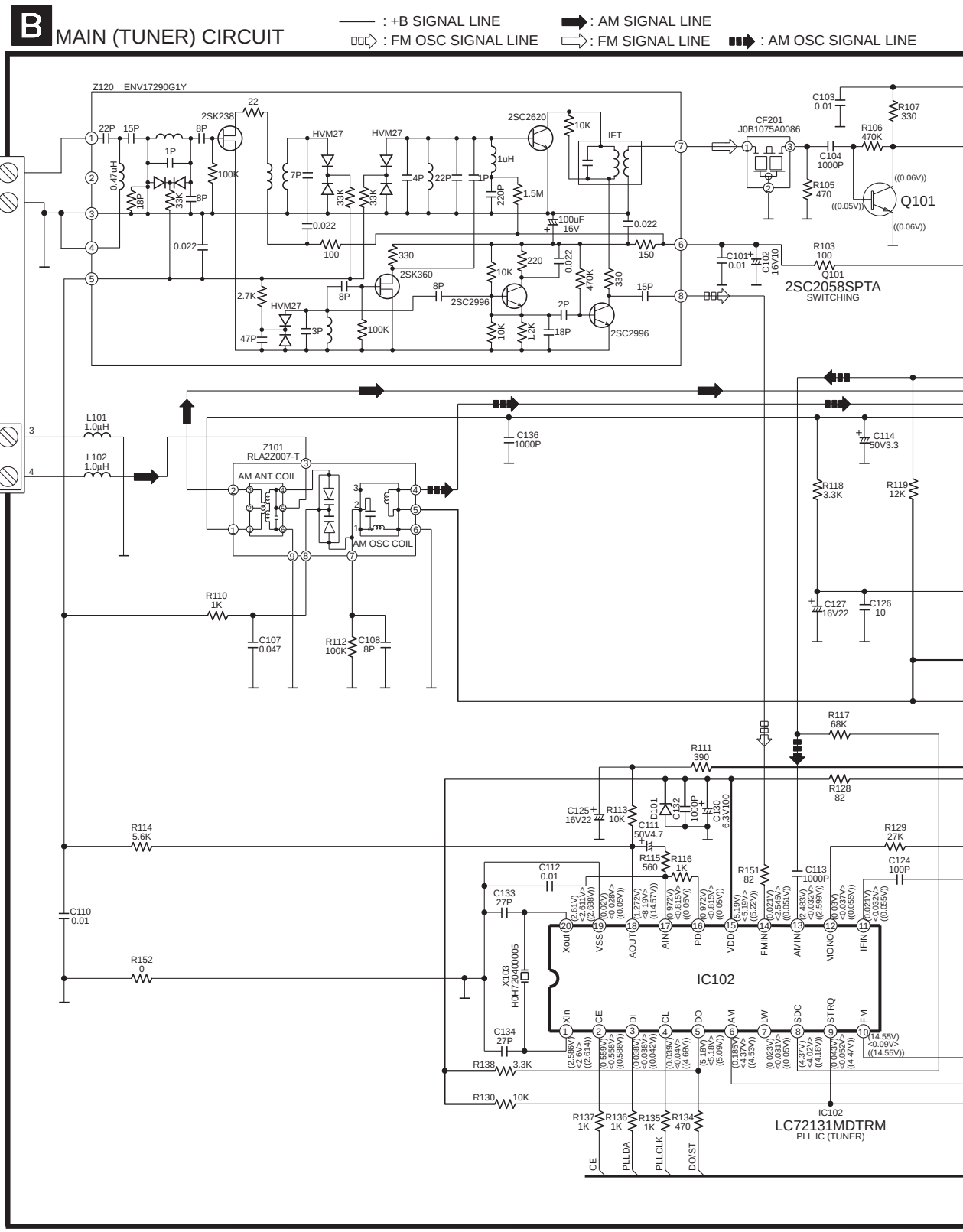

SCHEMATIC DIAGRAM-6

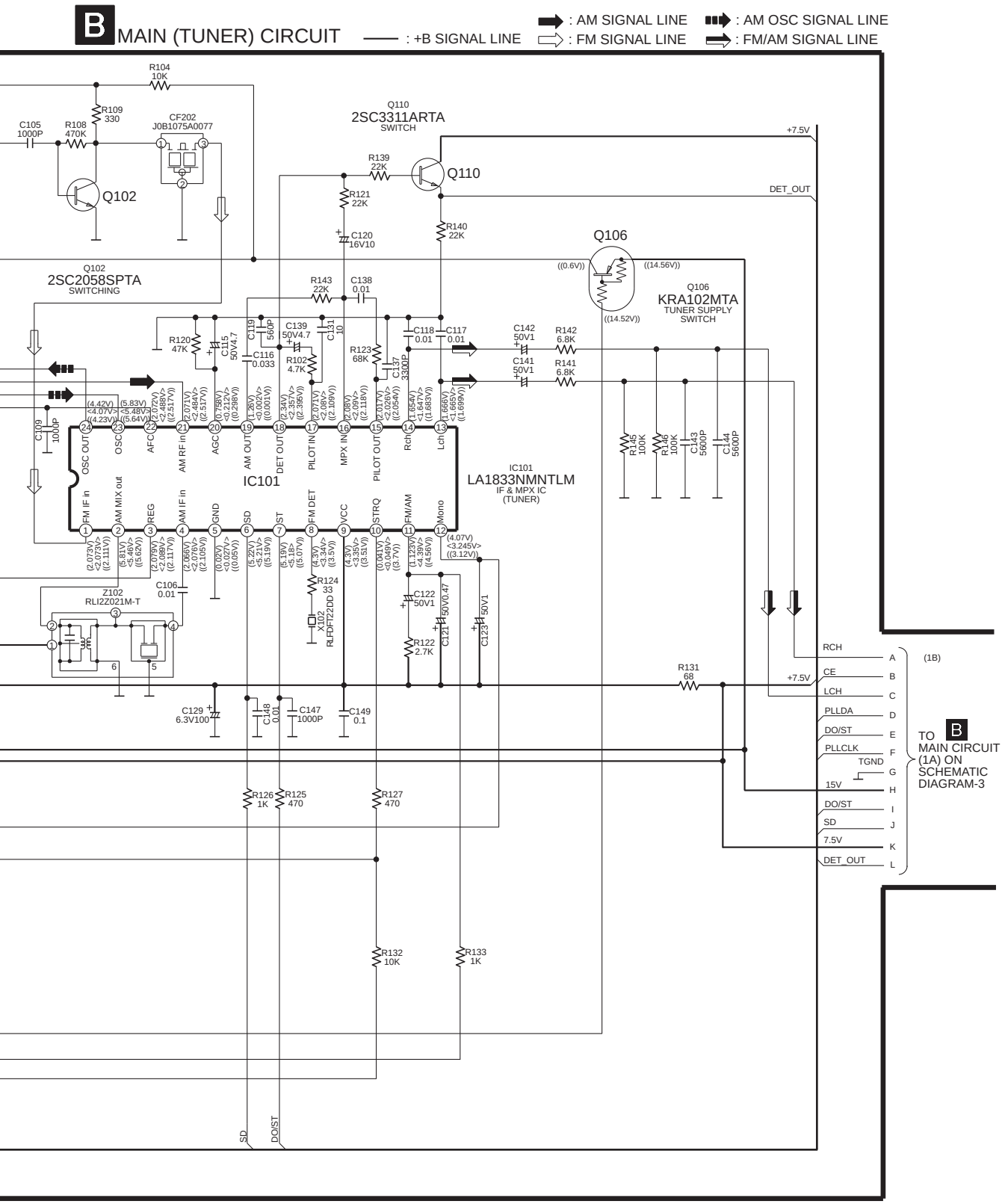

A CD SERVO CIRCUIT
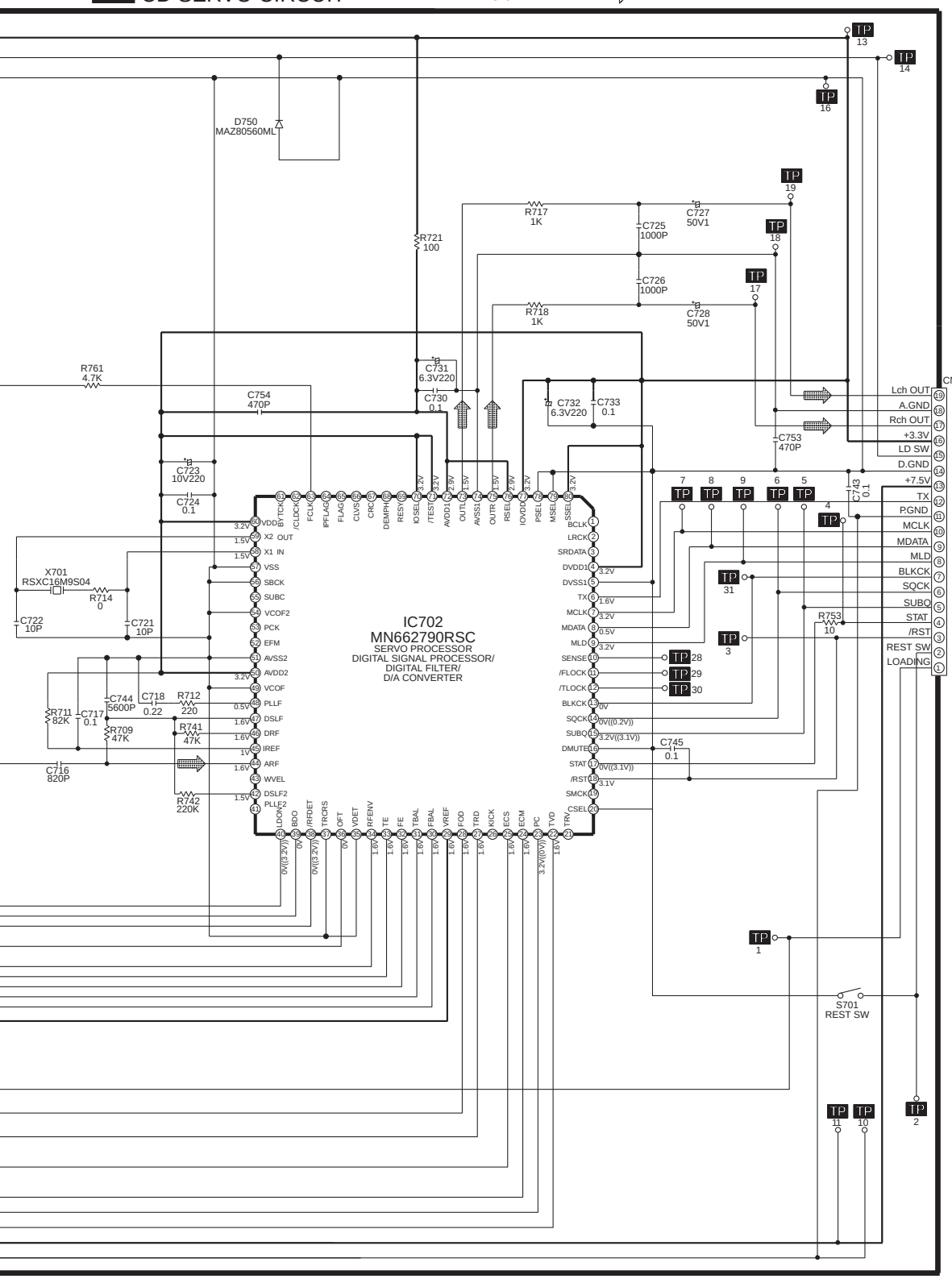
: +B SIGNAL LINE : CD SIGNAL LINE